IMPACT LED SIGNS

OUTDOOR LED SIGN - EMC INSTALLATION GUIDE

Table of Contents

Page 1: Cover
Page 2: Table of Contents
Page 3: Ventilation
Page 4: Cabinet Details
Page 5: Mounting
Page 6: Vented Side Covers
Page 7: Electrical & Grounding
Page 8: Connecting Twin Packs
Page 9: Modules
Page 10: Light & Temperature Sensors
Page 11: Network Considerations
Page 12: Connectivity
Page 13: Connectivity
Page 14: Maintenance Guidelines
Page 15: Cover

Ventilation

Ventilation Guidelines for G5 Series EMCs

Impact LED Signs are engineered to operate reliably in ambient temperatures ranging from -30°F to 120°F. Our displays are currently performing in real-world conditions from frigid northern winters to the extreme heat of southern deserts.

Proper ventilation is essential for all Electronic Message Centers (EMCs), including Impact LED's G5 model. These units generate heat during operation and require adequate airflow for dissipation. Without proper ventilation, the EMC may overheat, triggering an automatic shutdown. While the system will restart once it cools, repeated overheating can lead to permanent damage. Therefore, effective ventilation must be part of your installation planning.

Minimum Ventilation Requirement-Intake: When installing an Impact LED G5 EMC, ensure a minimum of 12 square inches of open intake ventilation per linear foot of the sign. This allows sufficient fresh air to enter the enclosure and support proper thermal regulation.

Minimum Ventilation Requirement – Exhaust: In addition to intake, provide a minimum of 12 square inches of open exhaust ventilation per linear foot of the sign. This ensures heated air can effectively exit the enclosure, maintaining safe operating temperatures.

General Ventilation Guidelines (Choose One):
A) Preferred Option: 1" of open space below and 1" above the EMC, with side covers that are at least 20% open.
B) 1" of open space below and 1" above the EMC.
C) 1" of open space above the EMC, with side covers that are at least 20% open.
D) 1" of open space below the EMC, with side covers that are at least 20% open.
E) Side covers that are at least 40% open, with no clearance above or below

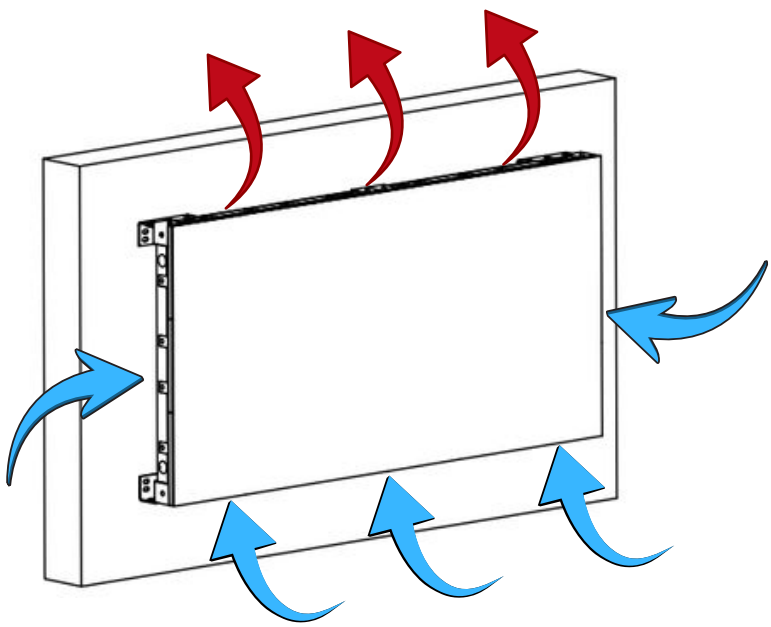

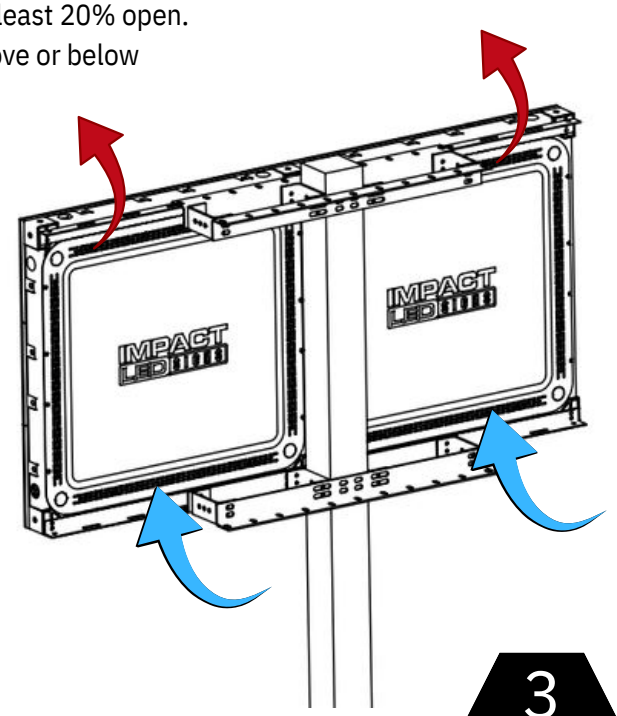

Cabinet Details

Sign Cabinet

Impact LED Signs G5 Series EMCs utilize an open back design with an optional back panel constructed of embossed aluminum that is powder coated black and features built in venting. The cabinet is engineered with extremely strong diecast aluminum around the perimeter and interior structure, completely replacing traditional fully enclosed cabinets. Lifting plates are located at the top of the cabinet for easy handling during installation. To accommodate diverse installation requirements, the G5 cabinet features multiple threaded mounting holes along all sides of the unit, allowing these points to be utilized in many different mounting configurations. A one and a half inch mounting angle runs along the top and bottom of the cabinet, providing maximum installation flexibility and structural stability. Please refer to your specific production drawings for exact dimensions, as the mounting angle may vary by product line.

Impact LED EMC G5 Cabinets

Rev 3/26/2026
G5 v1.0.0

Impact Electronic Message Centers are fully integrated into a durable, cast aluminum cabinet with a black powder-coated finish, eliminating the need for any additional weatherproofing or external cabinetry.

For streamlined installation, 1.5" x 1.5" x 1/8" steel mounting angles are pre-installed at both the top and bottom of the cabinet's rear. These angles feature precision-punched mounting slots, removing the need for on-site drilling. Slots measure 1/2" x 2.25" and are spaced 7 1/16" on center.

Removable lifting plates (not shown) are included to ensure safe, efficient handling and positioning of the cabinet during installation.

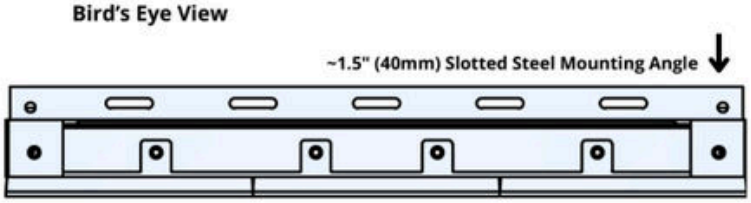

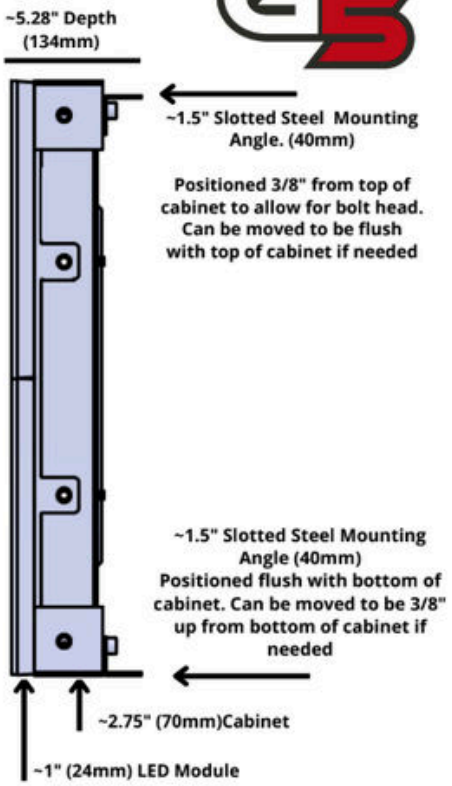

IMPACT LED SIGNS

General Mounting Guidelines

This information is for general reference. It does not replace professionally engineered drawings. Please contact the Impact LED Signs' Project Management Team with any specific questions. **Project Management can be reached at (800) 398-0576 x 5**

Steel mounting angles are provided on the back of each sign cabinet. Fasteners, support columns, brackets and electrical wiring conduit/accessories are not provided unless specifically included as a line item from Impact LED Signs.

Welded or Bolted

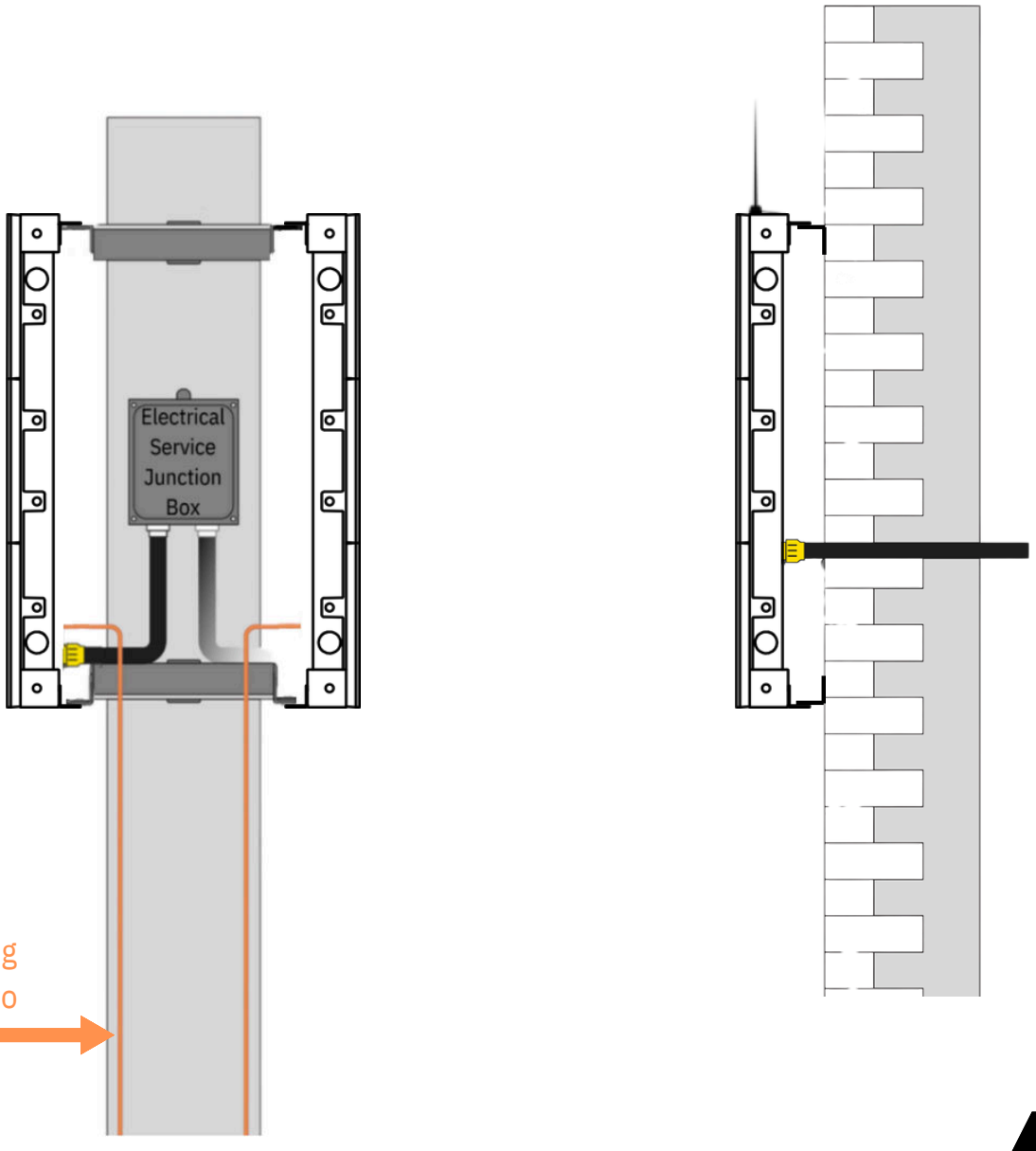

Vented Side Covers

Standard Vented Side Covers

If opted for, the EMC will come with our standard vented side covers (VSCs). VSCs are built from three panels: two identical pieces (flanges) and a third vented center panel. The flanges will come attached to each side of the electronic message center using the low-profile bolts with 6 mm Allen wrench heads. The bolts fasten into the pre-threaded holes on the sides of the electronic message center.

Install the ventilated center panel using the included self-tapping screws. Care should be taken so the screws penetrate the top piece and the flanges outside of the body of the electronic message center.

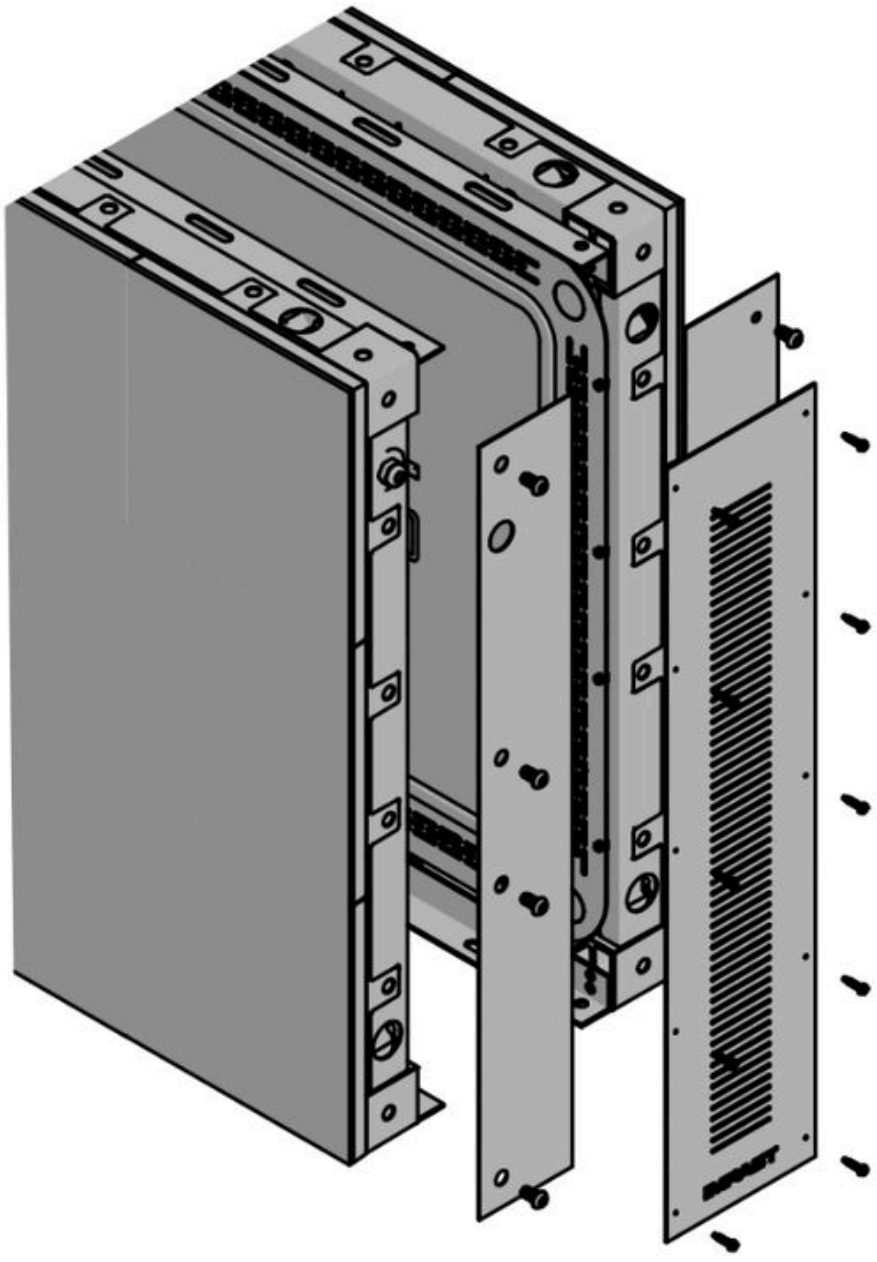

Electrical & Grounding

Electrical Information

- Install according to the National Electric Code and local regulations.
- Consult Impact LED Signs' shop drawing for voltage and electrical load requirements.
- All Impact LED signs must be installed on a dedicated circuit in compliance with NEC Article 600.5(A). The maximum circuit size shall not exceed 30A, and sign configuration may require multiple power whips for proper load distribution.
- Impact LED recommends, but does not require, that each face (side) be placed on its own dedicated circuit to simplify service and ensure optimal performance. This recommendation does not replace the NEC requirement for a dedicated circuit per sign.
- Connection to the EMC should be run to a watertight junction box or breaker panel and then a secondary whip, provided with the sign, connecting the junction point to the back of the sign cabinet at the Power Input.
- Always follow Lock-Out/Tag-Out procedures to ensure safety when working on, installing, or connecting to electrical lines.
- Always verify primary power voltage and continuity before connecting power to the EMC.
- **Grounding:** The grounding lug can be located on the lowest horizontal frame support near the edge of the cabinet on either side of the bracket dependent upon the specific model.
  - Per NEC code article 250.52.5 each EMC should have an in-earth 3/8" copper ground electrode (rod) at least 8' long. Per NEC 250.53.4 the rod shall be installed so that at least 8 ft of the rod is in contact with the soil.
  - Per NEC Sec. 250-54 the resistance to ground of a single-made electrode must be 25 ohms or less.
  - Per NEC Code the support structure cannot be used as a means of grounding.
  - Impact LED recommends, but does not require, the use of one electrode (rod) per face.
  - Impact LED recommends the grounding wire be connected to the grounding rod by clamps suitable for burial or exothermic weld.
  - 8' is recommended between the sign's structure and grounding rod. When using multiple grounding rods, the recommended minimum distance between rods is 6'.
  - Copper grounding wire must run directly from the cabinet's grounding lug to grounding rod. Signs constructed from multiple subsections may use a single grounding wire per side.
  - Per NEC 250.64C the grounding wire must be one continuous length without a splice or joint.
  - Failure to provide proper grounding may result in the voiding of the warranty.

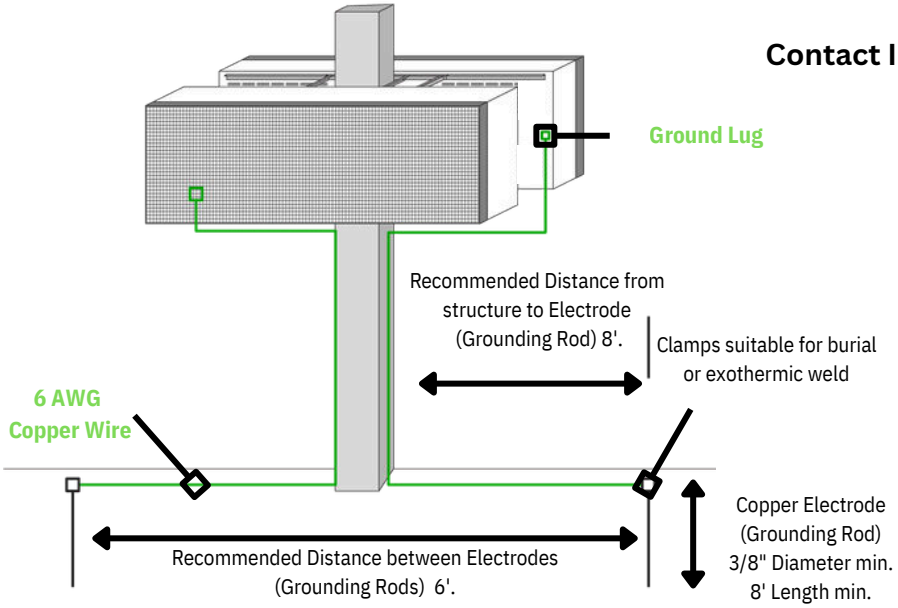

Questions?
Contact Impact LED Project Management at 1-800-398-0576 x 5

Connecting Twin Packs

Primary/Secondary Sides of an EMC

The information on this page is only applicable for a Two-Sided Display built in a Primary/Secondary configuration.

- Locate the quick access connection ports on the Primary Unit and Secondary Unit. Firmly seat the cable to ensure a solid connection. Gather and zip tie any loose cable.
- Note Data and Power Ports have unique connectors to avoid potential conflicts.
- Note it is preferred to have dedicated power to each sign side/face.
- Refer to the wiring schematic of your sign to locate the Input and Output data ports.

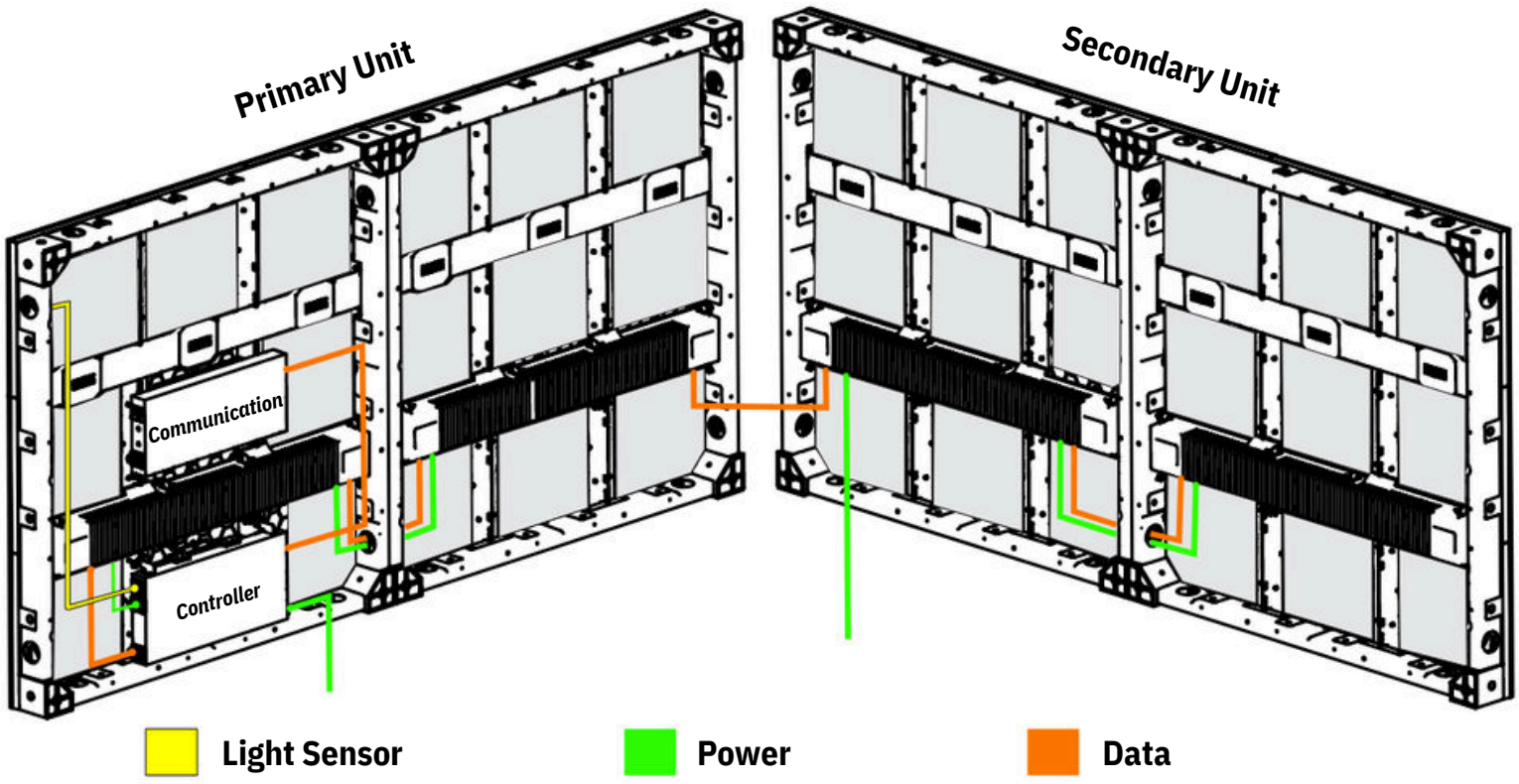

Removing Modules

TURN POWER TO THE EMC OFF!

To remove a G5 module, disengage the two module locks located on the face of each module, left and right of the center. Insert the three millimeter hex-head wrench into the access hole until it is fully seated, then gently turn it counter-clockwise a quarter turn until a "click" sound indicates the locking latch is fully disengaged. Continue turning the wrench to a full half turn to activate the mechanism that physically pushes and unseats the module away from the powerful mounting magnets holding it securely against the cabinet frame.

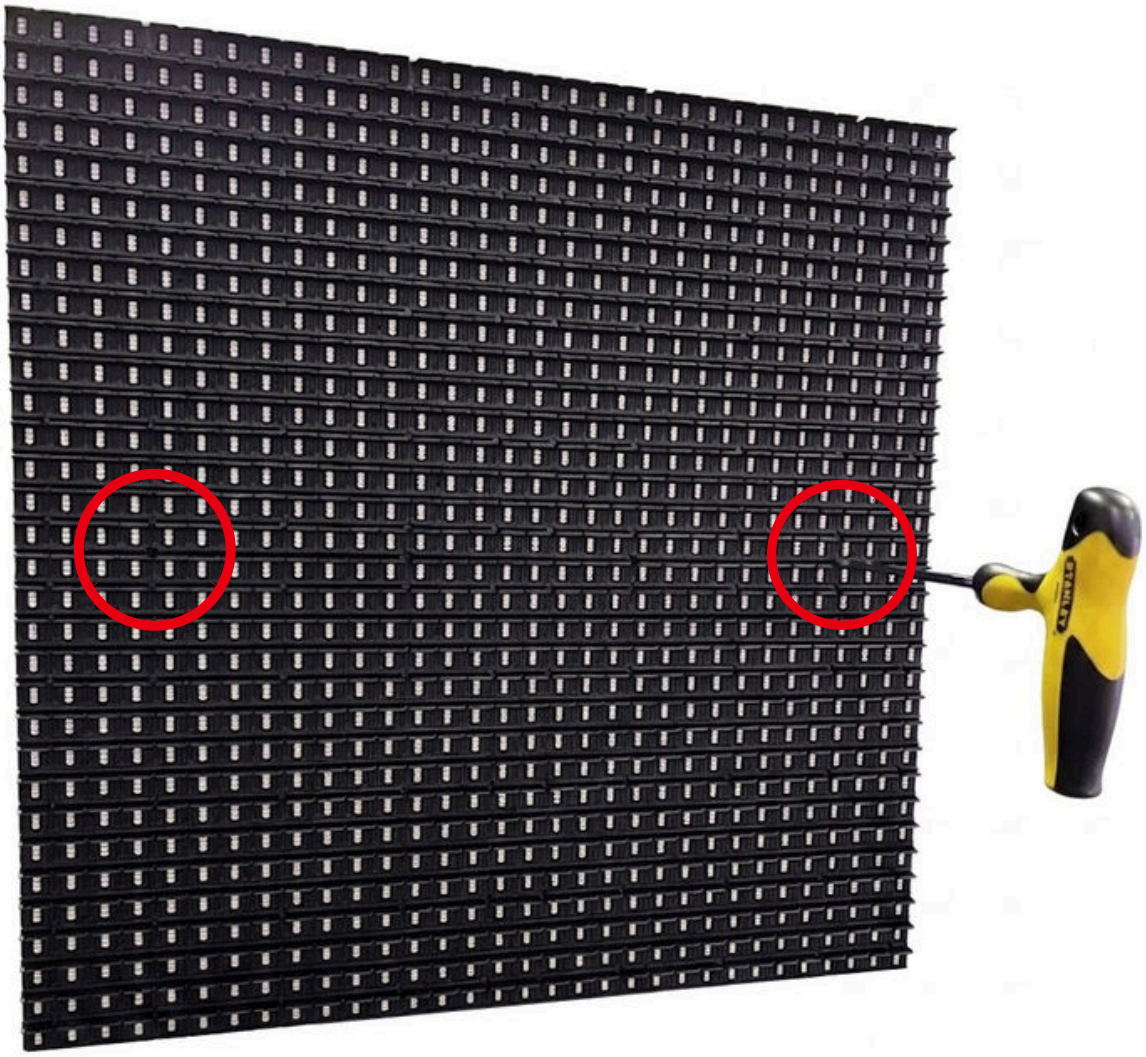

Light & Temperature Sensors

Ambient Light Sensor

The ambient light sensor detects the surrounding light level to automatically dim and brighten the display.

The ambient light sensor features removable, threaded washers which can be used to secure the sensor to a bracket or panel. Be sure to coil, zip tie and secure any excess cable.

The ambient light sensor should be facing the direction that will allow for the most light to access the sensor as early in the day as possible. Typically that is either on the Southern exposed face or on the top of the sign. Avoid installing the light sensor in shade or behind objects.







Temperature Sensor

Impact Electronic Message Centers do NOT come with a temperature sensor. Impact Cloud+ software (compatible with all connectivity methods) automatically retrieves weather and temperature information via an online weather application.

In the event your sign is running Impact PC Pro (Impact's PC based software), the temperature function is not a standard feature. If the temperature function is required please contact our technical support for assistance.

Technical Support can be reached at (800) 398-0576 x 3

Network Considerations

Network Configuration Requirements

Any Electronic Message Center communicating with our Cellular Modem option is considered to be "Plug and Play" and does not require additional configurations.

Electronic Message Centers communicating with our Wireless Network Bridge option leaves the factory configured for DHCP by default. To ensure a swift and easy installation, the local network may need to be prepped for our cloud controllers.

The fall back addresses are:

Sign Side Radio: 192.168.0.219

Building Side Radio: 192.168.0.218

General Connectivity Configuration

On most networks, minimal configuration is needed and the signs are plug and play. For more restrictive firewalls, network traffic for the EMC needs to be opened to:

Access.Impactledsigns.com

Monitoring.Impactledsigns.com

time.aws.com

For Cloud signs to communicate properly:

Ports:

HTTPS 443/TCP

WebSocket 8443/TCP

NTP 123/UDP

- **Network traffic access needs to be granted through all firewalls and all filtering systems.**
- **This is a basic outline of the network configuration requirements, additional changes may be required.**

For technical questions please reach out to tech@impactledsigns.com or 1-800-398-0576 x 3

Federal Communications Commission Interference Statement

This device complies with part 15 of the FCC Rules. Operation is subject to the following two conditions: (1) This device may not cause harmful interference, and (2) this device must accept any interference received, including interference that may cause undesired operation. This equipment has been tested and found to comply with the limits for a Class B digital device, pursuant to part 15 of the FCC Rules. These limits are designed to provide reasonable protection against harmful interference in a residential installation. This equipment generates, uses and can radiate radio frequency energy and, if not installed and used in accordance with the instructions, may cause harmful interference to radio communications. However, there is no guarantee that interference will not occur in a particular installation. If this equipment does cause harmful interference to radio or television reception, which can be determined by turning the equipment off and on, the user is encouraged to try to correct the interference by one or more of the following measures:

- Reorient or relocate the receiving antenna.
- Increase the separation between the equipment and receiver.
- Connect the equipment into an outlet on a circuit different from that to which the receiver is connected.
- Consult the dealer or an experienced radio/TV technician for help.

FCC Caution: Any changes or modifications not expressly approved by the party responsible for compliance could void the user's authority to operate this equipment.

Connectivity Methods

Cellular

The G5 Series EMC utilizes the Verizon network infrastructure with a Virtual Private Network (VPN) built in for security. Connectivity can vary from location to location depending on tower coverage and ambient conditions. Impact LED provides external antennas with each modem and requires they be mounted as high as possible above the EMC sign. It is the installer's responsibility to securely mount and document the location of the antenna as well as test connectivity prior to leaving the installation.

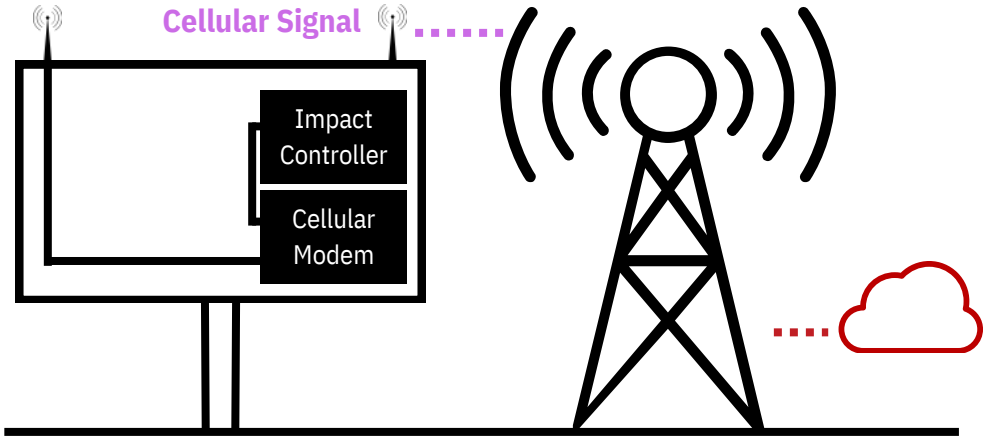

Wireless Network Bridge

Wi-Fi bridge kits are also a viable solution for many applications. This WPA encrypted connection is a point-to-point link between two transceivers, which have been pre-paired to communicate with each other. With a clear line of sight, a Wi-Fi bridge kit can provide 100mbps transmissions over distances in excess of 1 mile. Both transceivers should be facing towards each other with as few (if any) obstructions between them as possible. The "Receiving" transceiver should always be mounted on the outside of the sign. The "Sending" transceiver should be mounted external to the building.

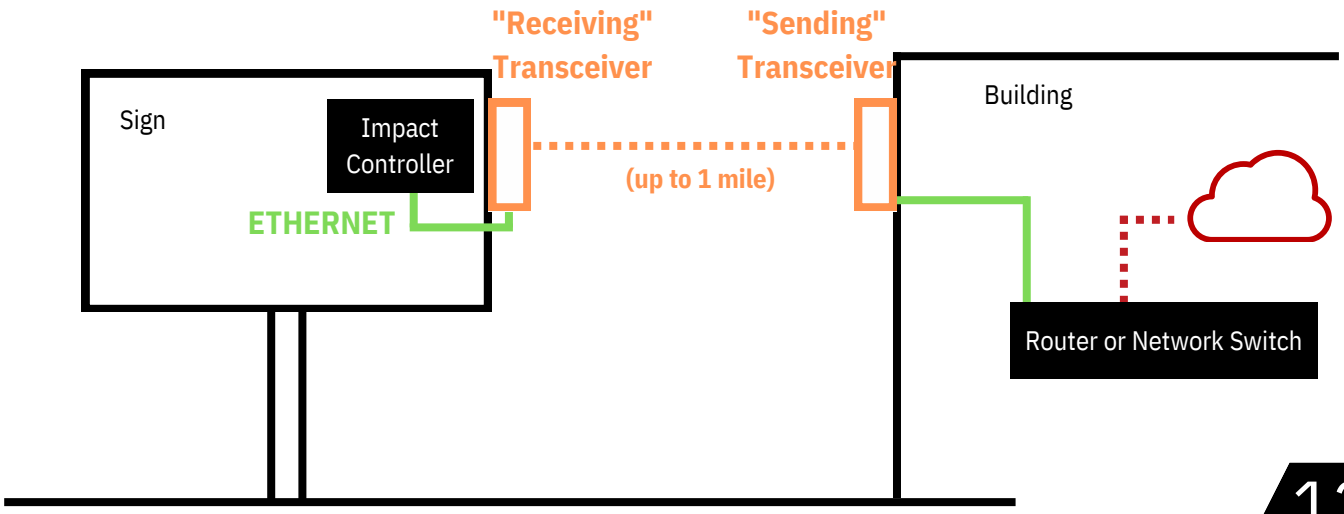

Connectivity Methods

Direct Ethernet

Impact LED signs accept a standard RJ45 ethernet connection. This is also referred to as a Cat5e/Cat6e cable, network cable, or LAN cable. The cable is connected to the router or network switch inside the building and the back of the primary unit. Any cable run over 300' should be boosted by a network switch.

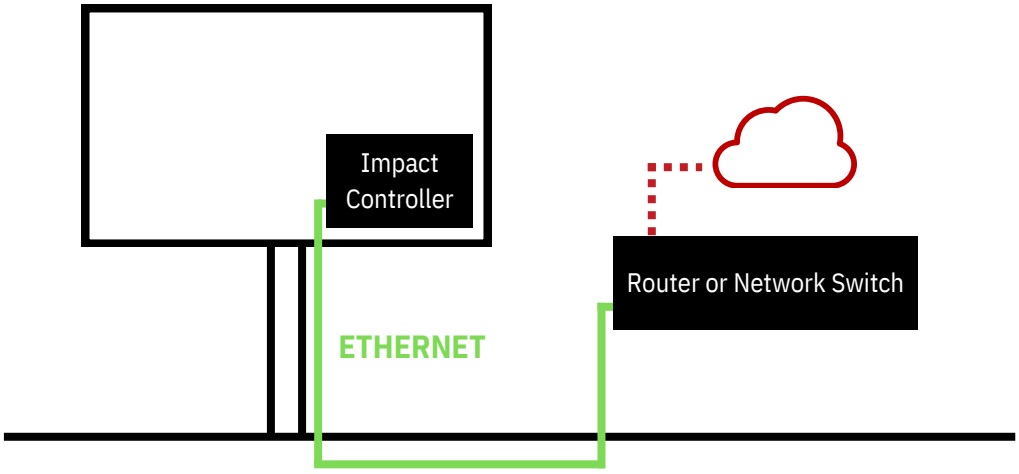

Fiber Optics

Fiber can be a great option for locations with no cellular service who require connectivity over a significant distance. Confirm the fiber specifications with your Impact LED Project Manager prior to installation. Impact LED provides SC fiber media converters which are wide temperature/industrial grade.

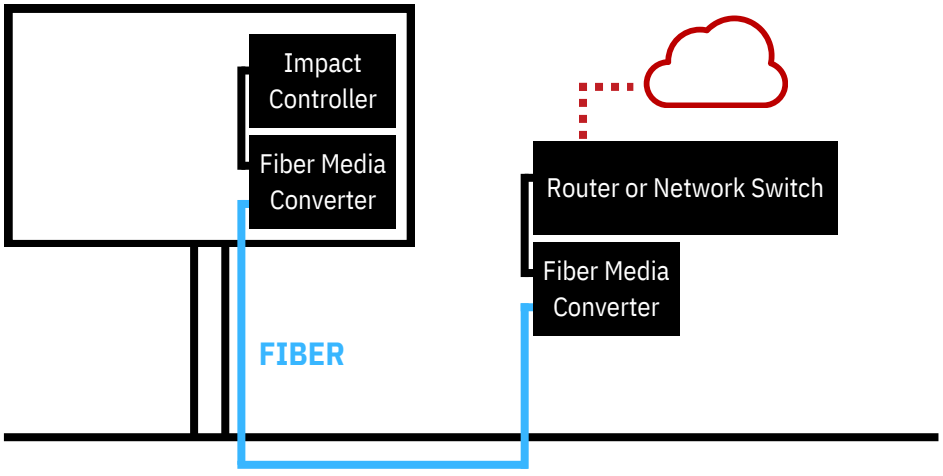

Maintenance General Specifications

The outer cabinet should be washed only with water. A garden hose without a nozzle and a lint-free cloth should be sufficient and gentle enough to wash the EMC. Water should be applied to the top of the sign and allowed to flow down like rain. Never spray up or sideways at the LEDs. No pressurized water should be used at any time.

No chemical solutions should be used on the sign, the pixels, rear covers, or doors.

No type of abrasive cleaner should be used to clean any part of the display. This includes sponges with light or harsh abrasives or brushes. Using these types of cleaners could slowly remove or damage the paint on the cabinet over time.

If touch-ups on the metal surfaces of the cabinet are necessary, use Black, Semi-Gloss exterior paint. Wipe down with mineral spirits or denatured alcohol before painting.

The internal hardware of the display should be cleaned with compressed air at the end of every summer to remove any buildup of dust and dirt. The AC power to the display must be turned OFF before you begin. This is for your safety and to prevent damage to any components.

Loose Hardware: Verify that screws or bolts have not come loose on vital components such as power supplies or receiving cards.

Cabinet: It is extremely important to clean the back side of the display to remove any accumulated dust and dirt. Over time, buildup on the rear surfaces and components can act as an insulator, trapping heat and reducing the system’s ability to dissipate it effectively. This can lead to increased internal temperatures and long-term component stress.

We recommend using a 4" paint brush to dislodge loose debris and a vacuum to remove the dust and dirt. Keeping the back of the sign clean helps maintain optimal performance and prolongs the life of the electronics.



IMPACT LED SIGNS